Form 166 6-12-500

NOTICE OF COMPLETION OF G.M.O.

East Ely, Nevada, May 26, 1917.

Auditor,

East Ely, Nev.

Dear Sir:-

So far as this department is concerned, there will be no further charges to G.M.O. 539 after this date. Our last charge to this G.M.O. will appear on our distribution for March 1917.

Yours very truly,

Name

Title Chief Engineer.

CWO. 539

March 14, 1917.

S-5.

The Protective Signal Manufacturing Co.,
1421-1439 Eighteenth Street,
Denver, Colo.

Gentlemen:

In reply to your letter of the 5th instant, file No. 575, letter addressed to our Vice President and General Manager, Mr. L. G. Cannon.

Your company's wig wag signal has been installed and we are all pleased with the operation of same. Find by referring to files at Auditor's office your company's bill was paid on the 3rd instant, and it will not be necessary to furnish us with any further statements.

Trust this letter enables you to close your file on this subject, and thanking you for your interest in this matter, I remain,

Yours very truly,

CWB/S.

Chief Engineer.

The Protective Signal Manufacturing Co.

1421-1439 EIGHTEENTH STREET
DENVER, COLO. March 5th, 1917

NEVADA NORTHERN RY. OFFICE OF MAR 8 1917 V.P.&G.M. EAST ELY, NEV.

FILE NO. 575

NEVADA NORTHERN RECEIVED MAR 9 1917 OFFICE OF CHIEF ENGINEER

Nevada Northern Railway Co.,

East Ely, Nevada.

Mr. L.G. Cannon, V.P. & Gen. Mgr.,

Dear Sir:

Since our letter to you of January 22nd we have not had the pleasure of hearing from you and we are wondering if we can be of any further assistance to you in connection with the installation of our wig wag signal on your lines. We would appreciate hearing from you as to whether this signal has been installed and what services you are obtaining from it.

We note on referring to the instructions on your order that your company aims to pay all invoices by the 25th of the month succeeding that in which the materials are shipped. Inasmuch as we have not as yet received a check for the apparatus furnished we are wondering whether or not we should have forwarded a statement on the first of the month or if our invoices originally furnished are ample in this connection.

Hoping for the pleasure of hearing from you at an early date and assuring you that we will appreciate it if you will call on us at any time that we can be of further service to you, with warm regards, we are,

Yours respectfully,

THE PROTECTIVE SIGNAL MANUFACTURING COMPANY.

A.M. Adams

Secretary.

AMA/G

NEVADA NORTHERN RAILWAY COMPANY

SIGNAL DEPARTMENT

GMO539

M. L. SMITH,
CHIEF ELECTRICIAN.

REFER TO FILE

EAST ELY, NEVADA. Feb 27, 1917.

NEVADA NORTHERN
RECEIVED
MAR 1 1917
OFFICE OF
CHIEF
ENGINEER

Mr. C. W. Backe,
Chief Engineer, N.N.Ry.Co.,
East Ely, Nevada.

Dear Sir:-

Herewith statement showing material used when installing Wig-wag signal, G.M.O.539,

6-20' Telegraph poles

900 ft. #9 iron wire

18- Wood brackets

18- Glass insulators

108 ft. 1/2" black iron pipe

170 ft. #12 R.C.Wire

200 ft. #14 R.C.Wire

4-1/2" Condulets

3-1/2 X 3/4" Bushings

2-1/2" Close nipples

2- Lag screws 1/2 X 3"

The above material is in addition to that furnished by the Protective Signal Manufacturing Co.

Yours truly,

M. L. Smith

The Protective Signal Manufacturing Co.

1421-1439 EIGHTEENTH STREET
DENVER, COLO. December 18th, 1916

FILE NO. 575

Nevada Northern Railway Co.,

East Ely, Nevada.

Mr. C.W. Backe, Chief Engineer,

Dear Sir:

Your favor of December 14th, file S-5, and our letter to you under date of December 15th evidently passed each other in the mails. You have no doubt received our lotter ere this reaches you, as well as the additional blue prints which we sent you, and we trust that you will have no difficulty in making the proper installation of the equipment.

The relays and time unit which were not included in the freight shipment will be forwarded you by Wells-Fargo Express, charges prepaid, tomorrow.

Yours respectfully,

THE PROTECTIVE SIGNAL MANUFACTURING COMPANY.

A.M. Adams

Secretary.

AMA/G

December 19, 1916.

S-5.

The Protective Signal Manufacturing Co.,
1421-1439 Eighteenth Street,
Denver, Colo.

Gentlemen:

Refer to your letter file No. 575 of the 15th instant.

Herewith acknowledge receipt of duplicate copies of your company's prints 165 and 166 which show further details of your type of highway crossing signal as purchased by our company.

Thanking you for your prompt reply to my request, and for your co-operation in this matter, I remain,

Yours truly,

CWB/S. Chief Engineer.

December 14, 1916.

S-5/

The Protective Signal Manufacturing Co.,
1421-1439 Eighteenth Street,
Denver, Colo.

Gentlemen:

In reply to your letter of the 11th instant file number 575.

Herewith acknowledge receipt of duplicate copies of descriptive bulletins numbers 2,3,4,5, and 6 for the installation of a worm drive wig wag crossing signal.

Note that you expect to make shipment of the apparatus as covered by our order not later than the 15th of this month, and also at which time you will furnish further details in connection with the installation of this equipment.

For your information may add that we have already constructed the required foundation for the signal mast, and ask of you to send as soon as possible duplicate copies of any additional prints or detailed information as required.

Thanking you in advance for your co-operation in this matter, I remain,

Yours very truly,

CWB/S.

Chief Engineer.

The Protective Signal Manufacturing Co.

1421-1439 EIGHTEENTH STREET
DENVER, COLO. December 11th, 1916

FILE NO. 575

Nevada Northern Railway Co.,

East Ely, Nevada.

Mr. C.W. Backe, Chief Engr.,

Dear Sir:

In accordance with the request contained in your favor of December 8th we are enclosing you under separate cover copies of our blue prints Nos. 158 and 1221, as well as duplicate copies of descriptive bulletins on the devices which go to make up our wig wag crossing signal installation. We expect to make shipment of the apparatus called for on your recent order not later than Friday, December 15th, at which time we will furnish you further details in connection with the installation of this equipment.

We shall be very glad to furnish you any further details or information which you may require and trust that you will not hesitate to call on us at any time of we can be of any assistance to you.

Yours respectfully,

THE PROTECTIVE SIGNAL MANUFACTURING COMPANY.

A. M. Adams.

Secretary.

AMA/G

THE
PROTECTIVE SIGNAL MFG. CO.
DENVER, COLO., U. S. A.

NAME:- Nevada Northern Ry East Ely, Nev.		
SCALE N.T.S.	DR'G NO. 165	TYPE A.C.
D'W'N BY C.P.D	C.K.'D BY W.E.W.	DATE 12-14-16

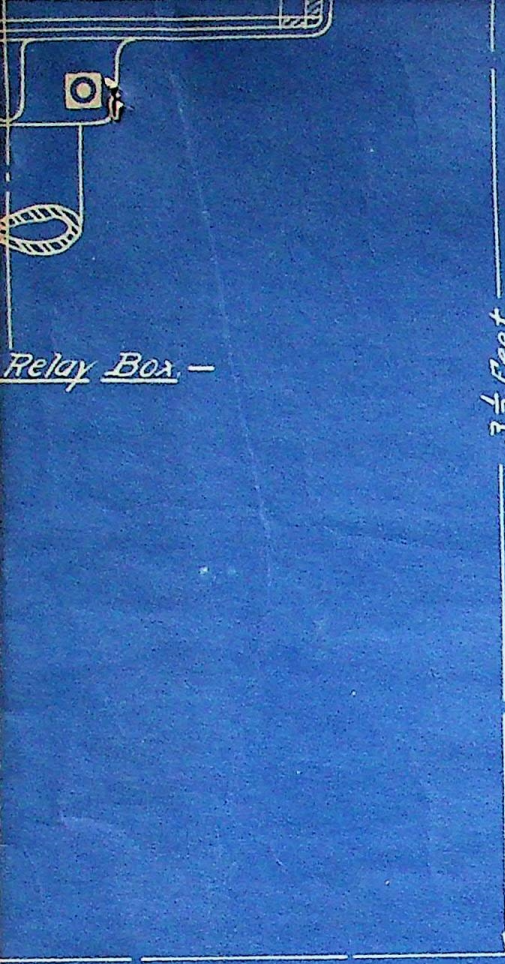

—Type A Relay Box.—

—Signal Mast Assembly—
—with—
—Wig Wag and Bell—

THE
PROTECTIVE SIGNAL MFG. CO.
DENVER, COLO., U. S. A.

NAME:- Signal Assembly		
SCALE 2" = 1'	DR'G NO. 1221	TYPE
D'W'N BY C.P.D.	O.K.'D BY W.C.N.	DATE 1-1-16

Form 589 2M 4-15-16

NEVADA NORTHERN RAILWAY COMPANY

PURCHASING DEPARTMENT

NOTE INSTRUCTIONS BELOW

Order No. A 12263

Req. No. CWB

East Ely, Nevada, November 27, 1916. 191

To The Protective Signal Manfg. Co.,
1421-39 Eighteenth Street,
Denver, Colo.

NEVADA NORTHERN RECEIVED NOV 28 1916 OFFICE OF CHIEF ENGINEER

Please ship to NEVADA NORTHERN RAILWAY COMPANY,

Care C. W. Backe, Chief Engineer, East Ely, Nev.

Routing Freight

The articles specified below and send bill in triplicate (3) to the undersigned.

QUANTITY	ARTICLES		PRICE F. O. B. East Ely, Nev.
3	Model C Oscillators	24.00	72.00
2	Relays, type AC	35.00	70.00
1	Time Unit, type EM	25.00	25.00
1	Solenoid switch, type AC		10.00
1	Model E Bell, type AC		35.00
1	National Worm Drive Wig wag, complete with brackets,		150.00
1	Signal Mast, complete with pole steps, type B relay box, mast base and ~~xxxxxx~~ anchor bolts		45.00
1	Fused knife switch		1.00
3	Lightning arresters	1.75	5.25
10	RSA Porcelain Terminals		2.50
			$415.75

GIVE ABOVE ORDER AND REQ. NO. ON ALL PAPERS RELATING TO THIS ORDER

INSTRUCTIONS

To Insure Prompt Payments, Follow Instructions Given Below

QUALITY—All materials furnished must be of the best of their respective kinds and will be subject to our inspection and approval any time within fifteen days after delivery at destination. Materials other than those specified in order must not be substituted without authority. If materials are rejected they will be held for disposition at your risk and expense.

QUANTITY—The quantity of material ordered must not be exceeded without authority in writing being first obtained.

SHIPMENTS—**ALL MATERIALS MUST BE FORWARDED BY THE PARTICULAR ROUTE NAMED UNLESS PURCHASED F. O. B. DESTINATION.**

PAYMENTS—Unless invoices are discounted this company aims to pay all invoices before the twenty-fifth of the month succeeding that in which the materials are shipped.

Time of Shipment .....

Send all bills in triplicate to prevent delay.

NEVADA NORTHERN RAILWAY COMPANY

DLC

Vice President and General Manager.

S-5.

December 19, 1916.

Mr. M. L. Smith, Chief Electrician,
Nevada Northern Railway Co.,
East Ely, Nevada.

Dear Sir:

Attached find blue prints No. 165 and 166 furnished by the Protective Signal Manufacturing Co., which shows further details in connection with the installation of their type of highway crossing signal.

The signal people write as follows:- " We believe with our former blue prints and with the information which you will gain from the prints which we are enclosing you will have no difficulty in the installation of this equipment."

Wish to call your attention particularly to blue print No. 166 which calls for two 3/4" conduits, one to connect to the cutout type C oscillator and the other to connect to the battery box or power line as constructed in the concrete foundation for the signal mast. The concrete foundation for signal mast was constructed as per their blue print No. 1221 dated 11/20/16, and on this print no notations were made for placing of conduits. Upon your advice will arrange to have the concrete foundation cut and conduits placed as per your instructions.

For your information may add that all parts have been shipped and expect same the latter part of this week. In addition will you please furnishe me a copy of your requisitions covering #9 bare wire, necessary #12 rubber covered duplex copper wire, 3/4" iron pipe conduit, together with insulators, brackets, poles, and other pole line material as required for the complete installation of this work.

Yours truly,

Chief Engineer.

CWB/S.
Encl. (2).

The Protective Signal Manufacturing Co.

1421-1439 EIGHTEENTH STREET
DENVER, COLO. December 15th, 1916

FILE NO. 575

Nevada Northern Railway Co.,

East Ely, Nevada.

Mr. C.W. Backe, Chief Engr.,

Dear Sir:

Referring to our letter to you of December 11th and to the apparatus called for on your company's order, we are enclosing you under separate cover duplicate copies of our prints Nos. 165 and 166 which show further details in connection with the installation of our apparatus.

It was Mr. Cannon's special request, when we had the pleasure of seeing him in Denver, that we furnish all details for the installation of our signal to make it entirely clear to you. We believe with our former blue prints and with the information which you will gain from the prints which we are now enclosing that you will have no difficulty in the installation of this equipment. However, if you desire any further information we trust that you will not hesitate to call on us.

We are enclosing copies of the two blue prints referred to, together with the original bill of lading covering shipment of the apparatus which goes forward today, with a letter to Mr. Cannon. We are shipping everything, with the exception of the two relays, and time unit, by freight and these devices will be forwarded by prepaid express not later than Monday, the eighteenth. Trusting that the apparatus will be received in good order and in due season, and assuring you that we will hold ourselves in readiness to assist you at any time upon request, we are,

Yours respectfully,

THE PROTECTIVE SIGNAL MANUFACTURING COMPANY.

A.M. Adams.
Secretary.

AMA/G

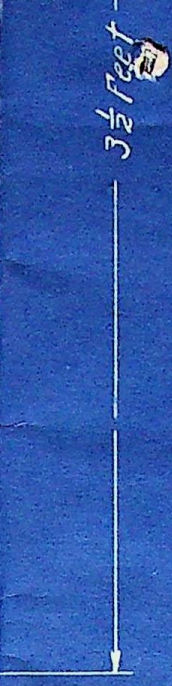

Mast Assembly—
th—
and Bell—

THE
PROTECTIVE SIGNAL MFG. CO.
DENVER, COLO., U. S. A.

NAME:- Mig Mag

SCALE 3' = 1"	DR'G NO. 122
D'W'N BY C.P.D	O.K.'D BY WE

th St.

60 cy. A.C.

Nevada Northern Railway Co

-Nov. 20-1916-

THE
PROTECTIVE SIGNAL ME
DENVER, COLO

NAME:- Nevada
East E

SCALE N.T.S. | DR'G NO

D'W'N BY ABN. | O.K.'D BY

NOVEMBER, 1915

BULLETIN NO. 2

The Automatic Thermo Time Unit

FOR USE IN CONNECTION WITH
SIGNAL CIRCUITS

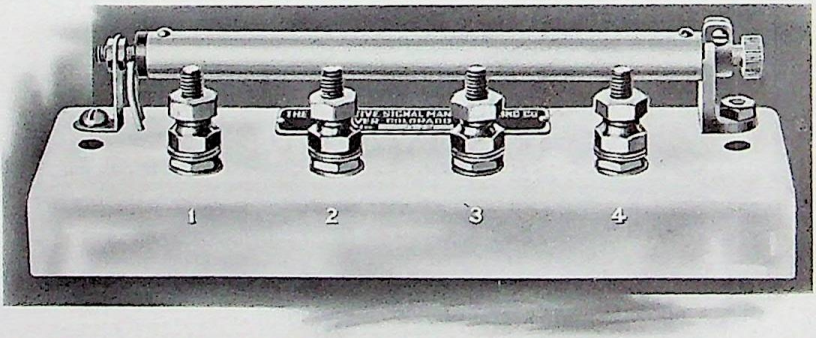

MANUFACTURED BY

The Protective Signal Manufacturing Co.

1421-1439 EIGHTEENTH STREET

DENVER, COLORADO, U. S. A.

INTRODUCTION

IN PRESENTING the Automatic Thermo Time Unit to the signal field, we feel that we are solving one of the greatest problems encountered in signal work, viz.: the problem of securing a positive, efficient and simple timing device at a minimum of cost.

The use of a thermostatic element in signal work is, we believe, new to the signal field, and that in developing this device we have made a long step in the progress of the art.

The device herein described is the result of extensive experiments and service tests carried on under various conditions. We have spared no expense in its development, and we have no hesitancy in recommending it for use in connection with any signal work where a device of this character is desired.

As with our other devices, we stand behind our Automatic Thermo Time Unit and guarantee its satisfactory operation.

The Protective Signal Manufacturing Co.

DESCRIPTION

THE Automatic Thermo Time Unit herein described is designed to operate in connection with a relay, and primarily for use in connection with railway signal circuits, but it may be employed in this way to advantage in connection with any electrical circuit where it is desired to operate a time element, for any specified time of from thirty (30) seconds to five (5) minutes.

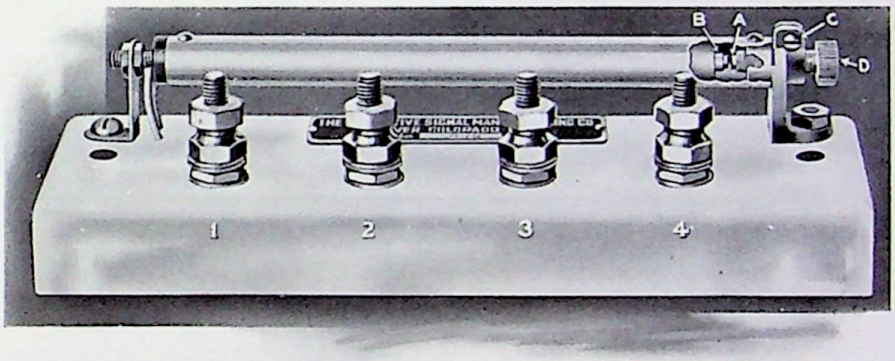

Fig. 1.

This Unit is not affected by the surrounding temperature of the atmosphere owing to the fact that the two basic metals used are of the same density and of the same material; therefore, the expansion and contraction of both metals, due to atmospheric changes, is the same.

The heating or operating unit is enclosed within a dust and moisture proof casing, and protected from the outer casing by an insulating, heat-resisting tube.

The operating rod is wound with a high resistance insulated wire, through which a current of electricity is passed, thereby generating heat which causes the rod to expand in a linear direction, and which, after a known time, makes contact with the adjustment screw (D). As soon as contact is made between the operating rod and the adjustment screw (D), the relay is energized and the

outside controlling circuit is closed. The thermostatic circuit is thereby opened, allowing the thermostat to cool and the operating rod to return to its normal position.

This device can be wound for any voltage from 6 to 110. The current consumption on 6 volts is 300 milo amperes.

The time is determined by the distance between the contacts (A) and (B), and the amount of current applied, and, as stated above, this time can be of any duration of from thirty (30) seconds to five (5) minutes.

The adjustment screw (D) is equipped with a micrometer thread, which allows for a very fine adjustment, and after proper adjustment has been made, and the desired time secured, the adjustment screw can be clamped by the small screw (C), eliminating any possibility for a change in the adjustment after it has once been made, and until the screw (C) is released.

To obtain proper adjustment and to secure the desired time, the Unit should be connected into the circuit and the adjustment screw screwed up until contact is made with the operating rod. The desired time can then be determined by unscrewing the adjustment screw until the space between the contacts (A) and (B) is such that it will consume the time desired before the operating unit again closes the contact after the thermo circuit is closed.

The contacts (A and B) are made of irrideo platinum and can be very easily cleaned, if necessary, by removing the adjustment screw (D).

The unit is mounted on a porcelain base which is equipped with R. S. A. standard binding posts. All wires are concealed and protected. The dimensions of the unit over all are 8 inches long, 2½ inches wide, and 2½ inches high. The complete instrument weighs 2 pounds, packed for shipment, and can be forwarded by parcels post if desired.

These Automatic Thermo Time Units are made in two types as follows:

Type "B"—suitable for battery service from six (6) to twelve (12) volts.

Type "C"—suitable for alternating current of any desired range from fifty (50) to one hundred and ten (110) volts, at either 25 or 60 cycles.

The prices of these devices are $10.00 each, F. O. B. Denver.

By the use of these Thermo Units, in connection with our other devices, protection can be given for any crossing, regardless of the number of tracks, switches or other complications, at a minimum of cost. The range of time which can be secured by these units will, we feel, cover almost any desired timing feature which may arise in signal work.

The following wiring diagrams show the methods of using the Thermo Unit in connection with our other standard equipment for a tower indicator installation, where battery is used; also, a highway crossing signal installation where alternating current is used. Both diagrams are for single track protection.

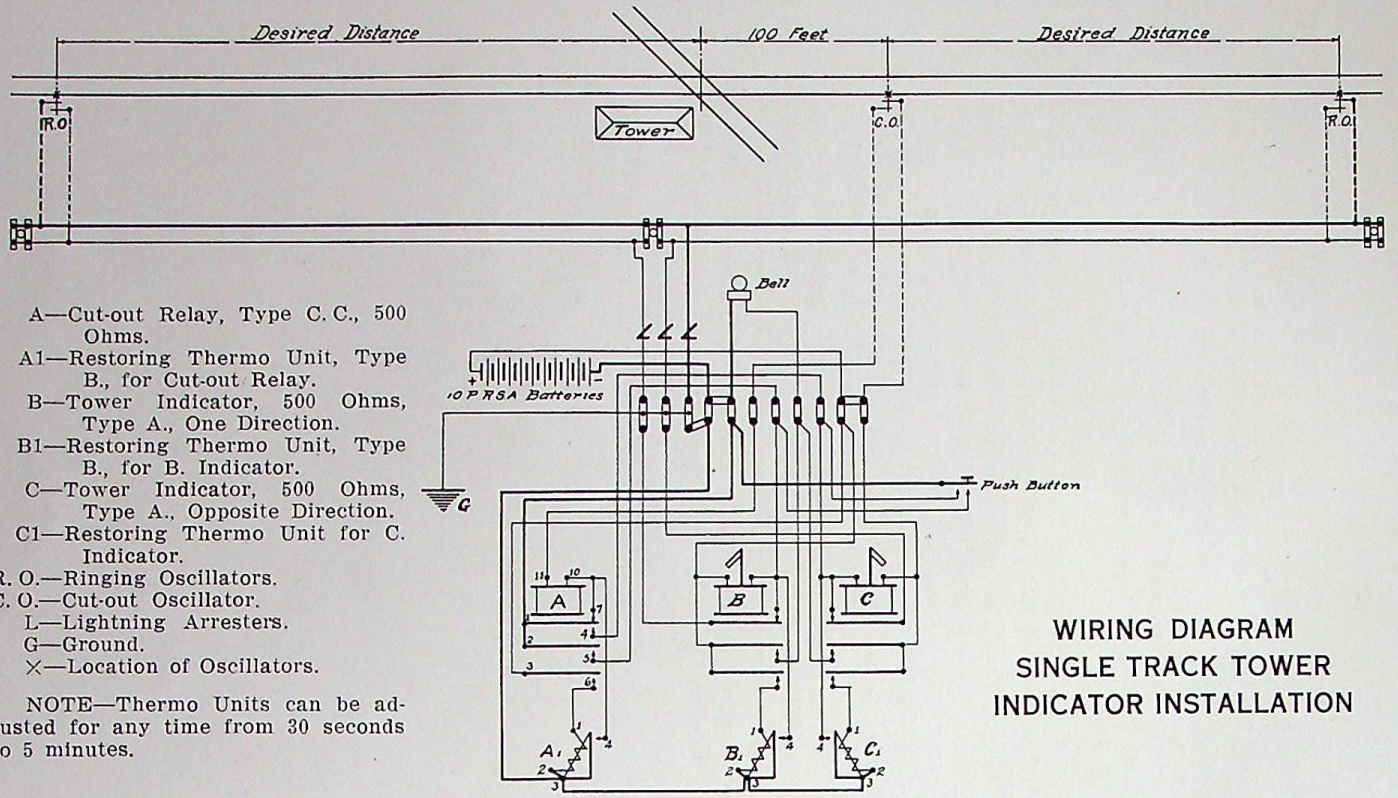

A—Cut-out Relay, Type C. C., 500 Ohms.
A1—Restoring Thermo Unit, Type B., for Cut-out Relay.
B—Tower Indicator, 500 Ohms, Type A., One Direction.
B1—Restoring Thermo Unit, Type B., for B. Indicator.
C—Tower Indicator, 500 Ohms, Type A., Opposite Direction.
C1—Restoring Thermo Unit for C. Indicator.
R. O.—Ringing Oscillators.
C. O.—Cut-out Oscillator.
L—Lightning Arresters.
G—Ground.
×—Location of Oscillators.

NOTE—Thermo Units can be adjusted for any time from 30 seconds to 5 minutes.

WIRING DIAGRAM SINGLE TRACK TOWER INDICATOR INSTALLATION

Movements both directions indicated. Bell cuts out, and indicators are restored automatically or manually.

Fig. 2.

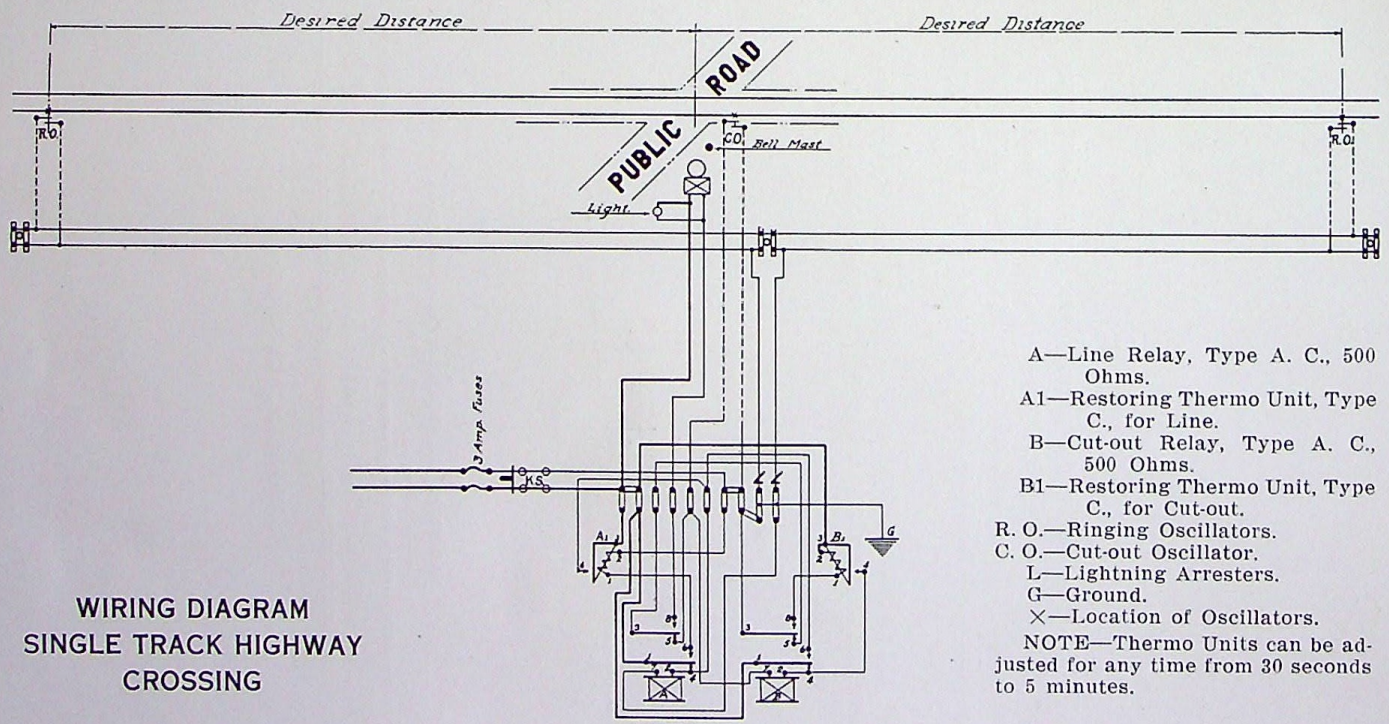

WIRING DIAGRAM
SINGLE TRACK HIGHWAY
CROSSING

A—Line Relay, Type A. C., 500 Ohms.
A1—Restoring Thermo Unit, Type C., for Line.
B—Cut-out Relay, Type A. C., 500 Ohms.
B1—Restoring Thermo Unit, Type C., for Cut-out.
R. O.—Ringing Oscillators.
C. O.—Cut-out Oscillator.
L—Lightning Arresters.
G—Ground.
×—Location of Oscillators.

NOTE—Thermo Units can be adjusted for any time from 30 seconds to 5 minutes.

Protecting movements in both directions. Bell cutting out at crossing.

Fig. 3.

CONCLUSION

WE shall be glad to furnish plans and quotations, upon request, embodying this new time element, for the protection of any and all crossings, or for any other desired electrical indication, using either D. C. or A. C. voltage.

We solicit your patronage and will gladly answer any queries in connection with any of our equipment.

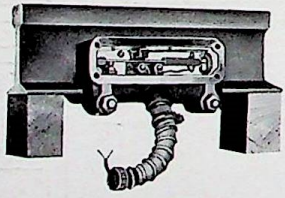

ADDRESS ALL COMMUNICATIONS TO

The Protective Signal Manufacturing Co.

DENVER, COLORADO

THE W. F. ROBINSON CO., DENVER.

FEBRUARY, 1916

BULLETIN NO. 3

The Model "E"

A. C. and D. C.

Highway Crossing Bells

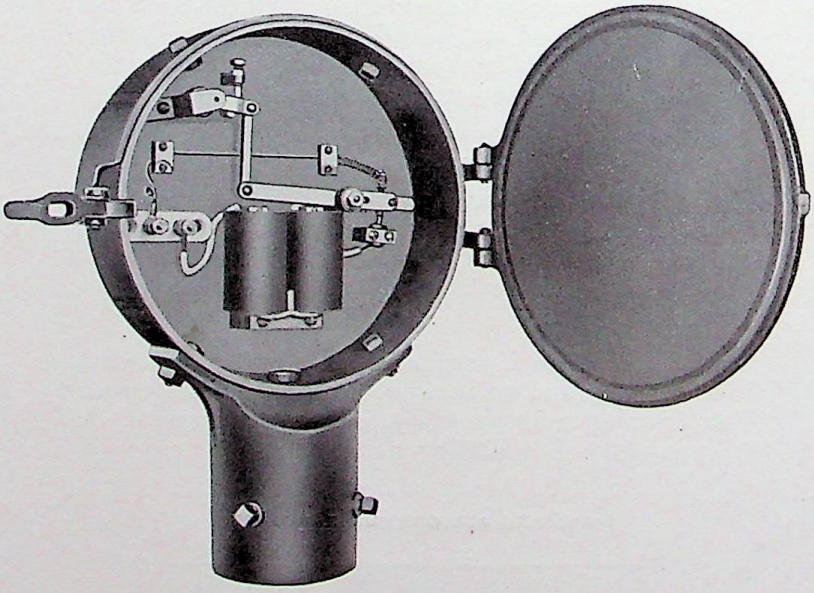

MANUFACTURED BY

The Protective Signal Manufacturing Co.

1421-1439 EIGHTEENTH STREET

DENVER, COLORADO, U. S. A.

INTRODUCTION

IN the development of the Model "E" Bell, herein described, we have not deviated from the basic operating principle which has been our bell standard for the past four years.

We have given careful consideration to the suggestions offered by various signal men in the construction of this bell and have endeavored to embody all features that tend toward making it highly efficient, durable, economical and reliable. At the same time we have reduced the number of parts, simplified the operating mechanism, eliminated all possible troubles from moisture and dust, and made it more accessible for inspection and maintenance.

The heart of any electrical device is the CONTACT MECHANISM, and we believe that in our Model "E" Bell this part of its mechanism is as near perfect as can be made. Adjustments are easily and quickly made, and due to the construction and method of operation of the contact switch the contacts will last indefinitely without renewal.

Our bells have been in service for years on the various roads of the country and we have yet to find a dissatisfied user. Permit us to make you a proposition on your next bell requirements. It will pay you.

ADDRESS ALL COMMUNICATIONS TO

The Protective Signal Manufacturing Co.

DENVER, COLORADO

DESCRIPTION

IN order that our alternating and direct current bells might be of uniform design and outward appearance the Model "E" Bell is made in three distinct types.

Type "A" for alternating current operation on 55 or 110 volts at 60 cycle.

Type "AA" for alternating current operation on 55 or 110 volts at 25 cycle; and

Type "B" for battery or direct current operation of from 6 to 12 volts.

Model E Bell Complete. Fig. 1.

The only difference in the alternating and direct current types is in the magnet coil units. All parts are interchangeable and are made of the finest materials obtainable. It is our idea in the construction of our bells to make all parts rugged and durable, eliminate friction in moving parts as much as possible, and make the salient and important parts as near perfect as we can. The service which these bells have rendered in the past will prove that our efforts in this connection have not been in vain. We believe that good workmanship and the best of materials in any device are essential to good service and reliability, and our devices are all made on these lines.

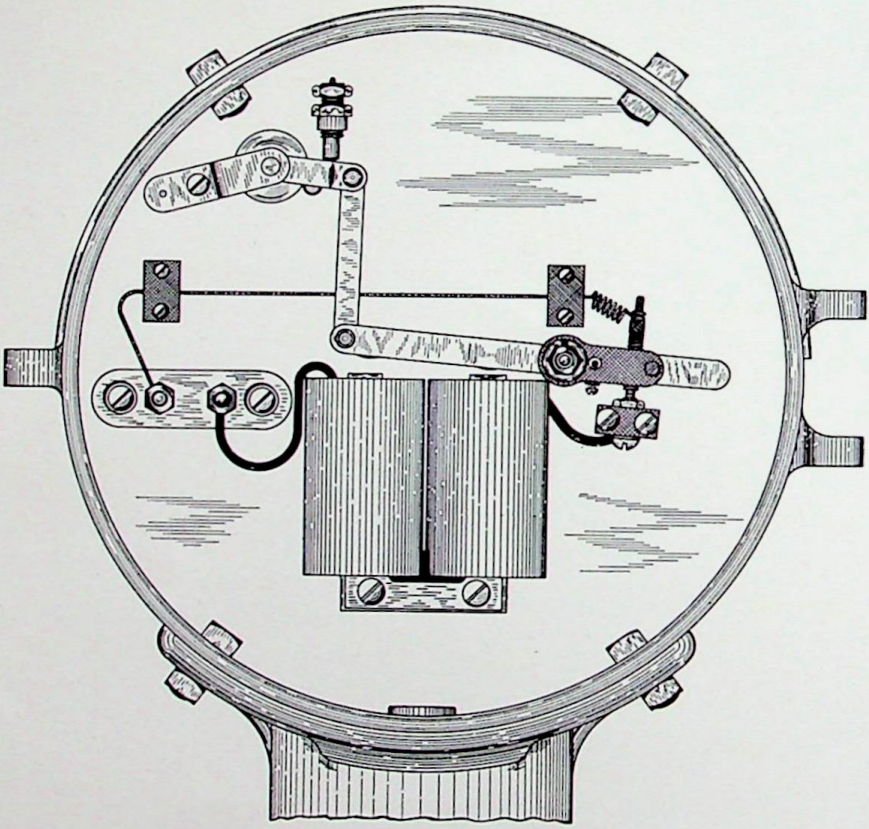

Interior of Model E Bell. Fig. 2.

In the construction of our A. C. Bells particular attention and study has been given to the laminated cores and magnet coils. The laminations of these bells are made of the finest grade of soft sheet iron, which can be purchased. The coils are wound with single cotton covered enameled wire, and each coil is tested before being assembled. The coil bobbins are held in place on the cores by strong cotter pins, making them absolutely secure and at the same time easily removed. The connections of the coils are of flexible wire and thoroughly protected by suitable outside covering. The magnet coil unit is mounted direct to the bell base, and held in place by two large screws so that it may be removed and renewed without the necessity of even removing the bell from the pole. The connections from the magnet coils are made to RSA Terminal binding posts on the interior of the bell casing. The outside connecting wires are carried through the base of the bell mounting to the RSA terminals.

All leads are suitably insulated and held in place by fibre cleats.

The armature, clapper fulcrum, and other steel parts are copper plated to prevent rust, and clapper bearings are made of crossed metals to insure proper operation. All steel pins and studs are hardened and blued.

The contact switch block is made in one unit, connection to which is quickly and easily made and so installed that it can be removed without the necessity of taking the bell from the pole. This block is made of bakelite and carries the upper contact which is of the plunger type and adjustable to regulate the proper stroke. The lower contact unit is stationary and thoroughly insulated from the bell casing. The operation of the contact unit is absolutely positive and, owing to the wiping surface given to the contacts, there is no possibility of corrosion.

Contacts are made of irrideo platinum, or tungsten. Carbon contacts can also be furnished if desired.

The back stroke of the clapper fulcrum is cushioned by a plunger bumper, by means of which the number of strokes per minute of the clapper can be regulated. This plunger bumper is securely located, and after once adjusted for the proper number of strokes can be locked in place. The stroke of the bell clapper can be regulated by the plunger bumper to deliver from 150 to 225 blows per minute.

All the operating mechanism of this bell is located on the interior of the bell casing. No moving parts are exposed except the clapper, which is thoroughly protected by the gong and hood. The interior of the bell is protected by a hinged door, which permits inspection during operation.

The door is equipped with a heavy wool gasket, which is forced into a groove cast on the outer edge of the door and cemented in place. When closed, this gasket is pressed tightly against the edge of the bell casing, making it absolutely dust and water proof. The door is also equipped with a special designed latch, which assists in opening the door, as well as to give an even pressure to the entire surface of the door when closed.

The gong is made of pressed steel 12 inches in diameter and designed to give a loud, clear ring. It is protected by the hood, which extends down over the sides nearly half way, and tends to divert the sound waves downward.

The Model "E" Bells are designed to be mounted on the top of an iron or wooden pole, or upon a bracket at the side of the pole. The proper bell mountings are included with each bell, with the exception of the cast iron bracket. All mountings are made to permit the connection wires being carried through the bottom of the bell casing.

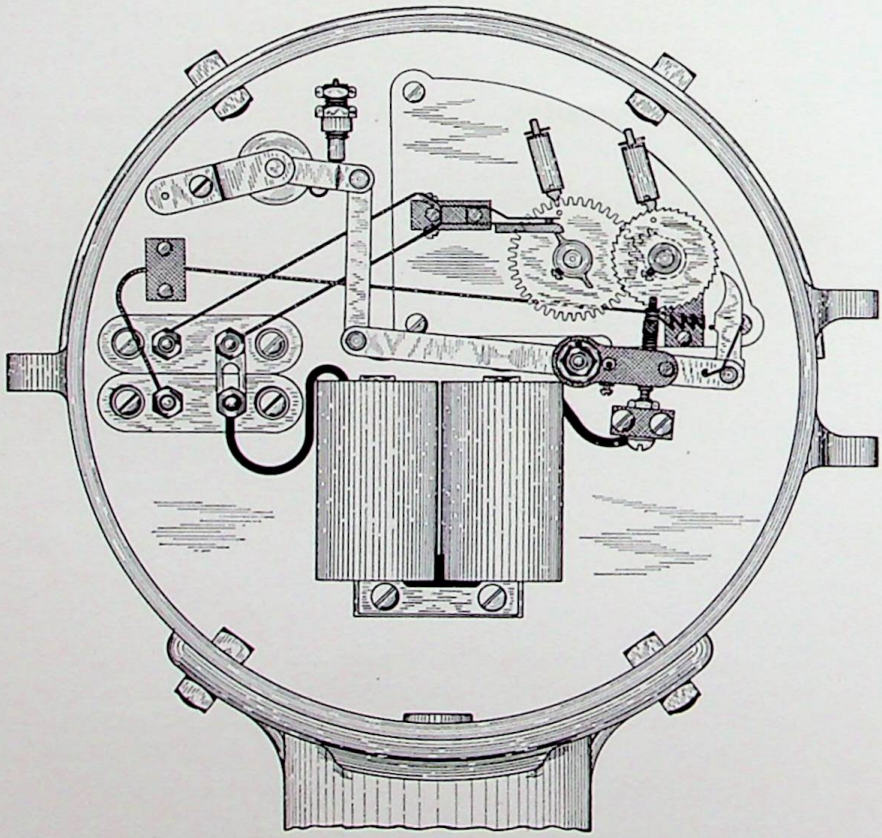

Interior of Model E. Bell with Time Element. Fig. 3

If desired, these bells can be equipped with a time element unit, which is mounted on the interior of the bell casing (Fig. 3). By means of these time units any desired ringing time can be obtained of from 30 seconds to 2 minutes and 40 seconds. The unit is operated by a ratchet pawl on the bell armature and the time is governed by the segment gear on the ratchet wheel bearing, or the cams on the time gear. The operation of this unit is entirely automatic and positive.

The time elements are particularly well adapted to country crossings where the ringing of the bell after a train has passed the crossing is not objectionable, and this method of operation is a very economical one so far as the first cost is concerned.

A lighting unit similar to the time element unit can be furnished if it is desired to operate lights in connection with the bell. By means of these units, lights can be cut in and remain lighted while the bell is in operation or can be flashed during its operation.

If desired the light and time elements can be combined and the bell equipped with both features by the use of the one unit.

OPERATION

THE operation of these bells is very simple. When circuit is closed to the bell magnets the armature is attracted to the poles, operating the clapper fulcrum and the clapper is thrown suddenly against the gong. At the same time the armature switch pin engages the switch block and opens the contacts, allowing the armature to return to normal position by gravity, when the pin again engages the switch block in the opposite direction and closes the contacts again energizing the bell magnets. This operation is repeated until the bell circuit is opened.

When bell is equipped with the time or light element, the operation of the armature propels the ratchet wheel of the element by a ratchet pawl on the end of the armature (Fig. 3) and, as the bell circuit is governed by the time element, the operation is repeated until the ratchet makes its required number of revolutions and bell circuit is again opened by the switch cams on the gear wheel bearing.

The current consumption of the Direct Current Bell is 300 milo amperes, and the alternating current bells consume 2.5 watts.

Prices of our "Model "E" Bells will be given upon request. Our bells are absolutely guaranteed against imperfections in material and workmanship and any part found imperfect will be replaced free of charge. We stand behind all our apparatus and assure entire satisfaction.

CONCLUSION

WE will be pleased to submit blue prints showing proper wiring diagrams and circuits to cover any protection, embodying our various devices, as well as quotations or any further information in connection with any of our systems, upon application. A blue print or rough sketch showing existing conditions at the point where protection is desired will greatly assist us in making our recommendations and estimates of cost.

We guarantee our devices and stand back of all our apparatus.

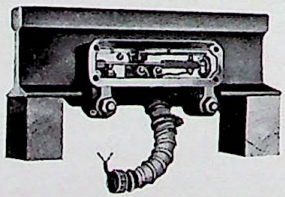

ADDRESS ALL COMMUNICATIONS TO

The Protective Signal Manufacturing Co.

DENVER, COLORADO

THE W. F. ROBINSON PRINTING CO.

FEBRUARY, 1916

BULLETIN NO. 4

Model "C" Oscillator

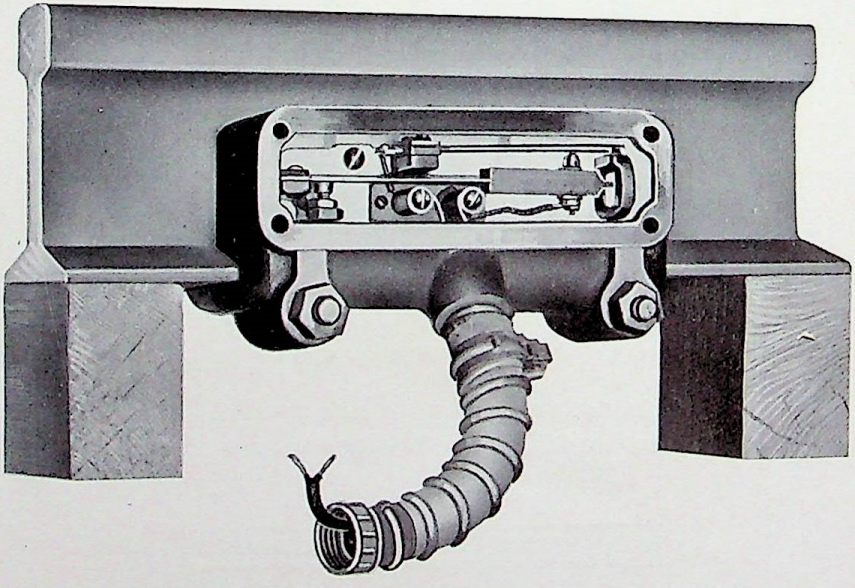

MANUFACTURED BY

The Protective Signal Manufacturing Co.

1421-1439 EIGHTEENTH STREET

DENVER, COLORADO, U. S. A.

INTRODUCTION

THE Model "C" Oscillator has proven, by its years of actual service on many of the standard steam and electric roads of the country, that it is the most efficient, economical and reliable track instrument on the market.

Its manifold uses and advantages appeal to every one who has had an opportunity to investigate it. We do not attempt in this pamphlet to give a detailed description and list the many uses to which this device has been put, but simply to give a description of its construction and operation.

We absolutely guarantee the Oscillator, and solicit a trial to prove its superiority over all other track instruments.

The Protective Signal Manufacturing Co.

DESCRIPTION

THE above cut shows the simplicity of the Oscillator. This device is the basic principle and operating medium of our Protective systems. It is simple in construction, installation and operation. It is water-proof, and made to withstand indefinitely the shock of the heaviest trains passing over it. The Oscillator is made from the best of materials, the outside casing and cover are of fine grey iron castings. The operating mechanism is contained in one unit (Fig. 2), which can be readily and quickly removed from the housing casting without removing the casting from

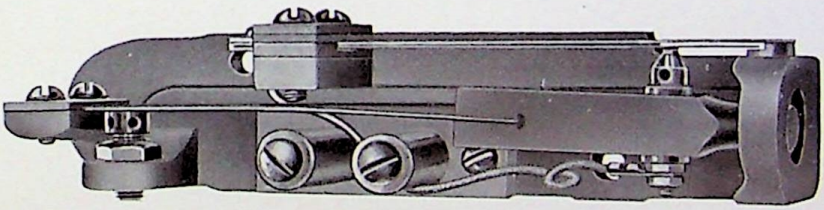

Oscillator Operating Unit Fig. 2

the rail. It can be adjusted for open or closed circuit, and the adjustment of the contacts can be made without disturbing the unit as mounted in the housing casting.

The connections are all made on the interior of the housing casting to binding posts, and the outlet for the connecting wires is sealed so as to make the interior absolutely water-tight (see "H", Fig. 1). There are only two moving parts, the upper contact spring and the lower contact vibrating bob.

But one adjustment screw governs the operation of the Oscillator for an open or closed circuit (see "J", Fig. 1). The contacts are all made from irrideo platinum of the highest grade, and are rigidly and securely located.

All steel parts are copper-plated to prevent rust.

The Oscillator is not affected by foreign currents, as it is insulated from the rail.

It can be installed and operated in the midst of interlocking track circuits or other signals without in any way interfering with them.

It is securely attached to the rail by hook bolts, and is made to fit any size or section of rail (see "M", Fig. 1).

It can not work loose and is small enough not to interfere with the ties.

It is adapted to any kind of track, and can be so adjusted as to close or open the circuit from the passing of any car or train.

The Oscillator is used in the operation of Highway Crossing Signals, Annunciators, Time Relays, Interlocking Relays, Tower and Station Calls, Car Counters, Tunnel Signals, Light Signals, and in a great many other desired electrical signal indications.

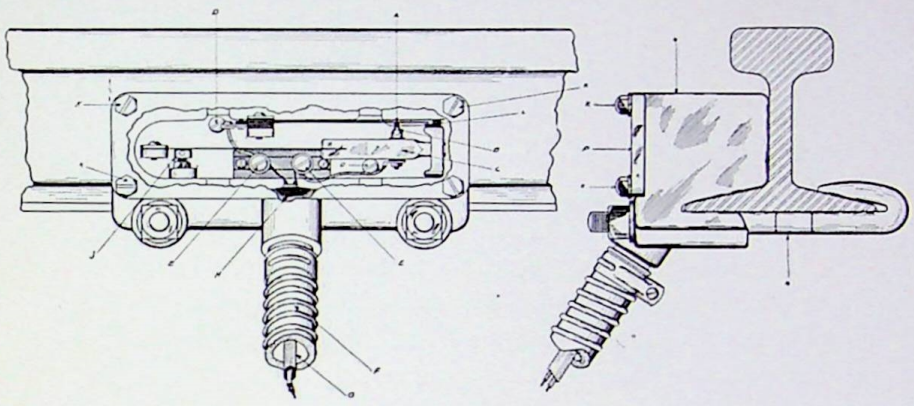

Fig. 1

DETAILS OF OSCILLATOR

A—Upper contact, platinum rivet mounted on phosphore bronze spring.

B—Lower contact, platinum rivet mounted in contact screw, insulated from vibrating bob "C."

C—Vibrating bob supported on flat steel spring.

D—Screws securing oscillator unit in interior of housing casting.

E—Binding posts.

F—Flexible hose connection, steel ribbed ¾-inch.

G—Copper duplex rubber covered No. 12 wire.

H—Compound, sealing outlet.

J—Adjustment nut for adjusting "C."

K—Cap screws holding cover.

L—Insulation.

M—Hook bolt.

N—Housing casting.

P—Cover.

OPERATION

THE Oscillator opens or closes a circuit by the vibration of its contact members. In closed circuit work, which we recommend in all signal circuits, the two contact points ("A" and "B", Fig. 1) are adjusted so as to make a firm or delicate wipe contact with each other, as required. The Oscillator is secured to the rail at the point from which the indication is desired, which can be any distance from the signal, and connected to the signal proper, where closed circuit is used, through a 500-ohm relay, by means of line wires usually installed on the regular telegraph poles. The Oscillator is then connected to the line by means of two rubber covered copper wires ("G", Fig. 1), run underground through pipe conduit or other suitable protection, and receives its current from the source of supply at the signal.

The movement of a passing train or car imparts a vibration to the rail, and when train moves over the point where the Oscillator is placed, starts the lower contact member ("C", Fig. 1) of the Oscillator moving up and down, and breaks the contact between the contact bob and upper contact spring ("A" and "B", Fig 1), opening the line circuit to the relay, which in turn closes the local or signal circuit.

On open circuit the upper spring contact ("A", Fig 1), and the lower contact member ("B", Fig. 1), are adjusted with about one thirty-second of an inch clearance, so that when vibration is set up in the Oscillator, the lower vibrating member intermittently closes the circuit by coming in contact with the upper spring contact.

A FEW OSCILLATOR FACTS

1. It eliminates necessity of bonding tracks.
2. It costs less to install.
3. It costs less to maintain.
4. It is reliable in operation.
5. It is rugged and will withstand any service test.
6. It requires no change in track or ties for its installation.
7. It will control auxiliary signals in automatic territory without interfering with automatic signal circuits.
8. Its operation is not affected by atmospheric changes.
9. It has a large range of adjustment and can be adjusted so that it will operate from a hand car, or any other movement on the track, or so that it will only operate by the passing of heavy traffic.
10. It can be operated on open or closed circuit.
11. It is moisture and dust proof.
12. It is adaptable to any track condition.
13. It can be installed where steel ties are used.
14. Its use is universal on either electric or steam railways.
15. It has no electrical connection with the rail.

PRICES

The prices of the Model "C" Oscillators, complete with hose connection and made to fit any section of rail, will be furnished on request.

CONCLUSION

WE will be pleased to furnish one or more of these devices on approval for service test to any one interested. If there is any doubt as to the Oscillator meeting requirements, we will furnish wiring diagrams and circuits showing manner of installation on any contemplated work.

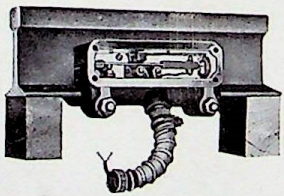

ADDRESS ALL COMMUNICATIONS TO

The Protective Signal Manufacturing Co.

DENVER, COLORADO

THE W. F. ROBINSON PRINTING CO.

MARCH, 1916

BULLETIN NO. 5

A. C. and D. C. Relays

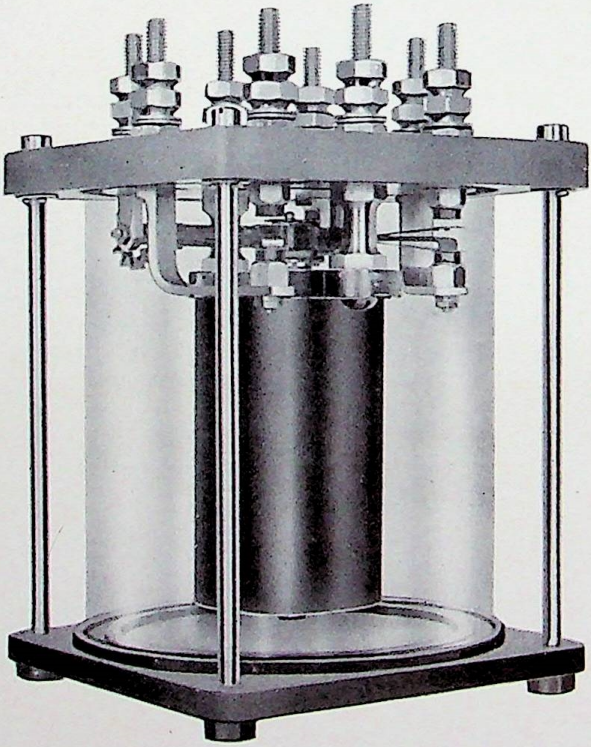

MANUFACTURED BY

The Protective Signal Manufacturing Co.

1421-1439 EIGHTEENTH STREET
DENVER, COLORADO, U. S. A.

INTRODUCTION

THE relays herein described are designed for use in connection with Highway Crossing Signal equipments, or wherever a quick-acting relay is desired.

In the development of these relays we have adhered to all that is considered most desirable in devices of this kind, namely; positive and reliable operation, economical in current consumption, simple and durable in construction, and easy to inspect and install. All these features are embodied in both our A. C. and D. C. Relays, and we have no hesitancy in backing them with an absolute guarantee.

ADDRESS ALL COMMUNICATIONS TO

The Protective Signal Manufacturing Co.

DENVER, COLORADO

DESCRIPTION

THE simplicity of construction of our A. C. Relays, when compared with others that are on the market, will, we believe, appeal to every one interested in A. C. signal devices. These relays are the result of practical service experiments carried on by our engineers for over a year, during which time they have been kept in constant service and all possible defects and imperfections, both in material and operation, have been corrected.

The essential feature in any relay is the positive operation of its contacts.

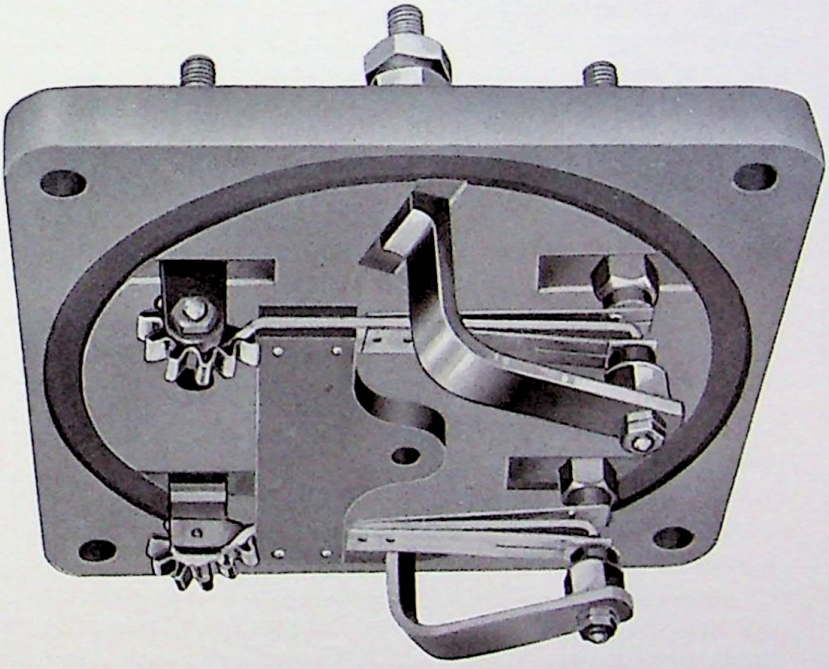

A. C. Relay Operating Unit. Fig. 1.

To eliminate armature vibration from contacts in an A. C. Relay, due to the frequency, is a very difficult problem to solve. In our A. C. Relays, while the contacts are operated and controlled by the armature, the armature has no fixed connection with the contact fingers and, by the method used in the design of the armature, we have effectually overcome any possibility of vibration reaching the contacts.

The contacts of these relays are made of platinum or coin silver to carbon. The contact fingers are made of spring bronze and so designed as to give a firm bearing and wiping surface to the contacts. The contact buttons are composed of carbon firmly secured in brass holders which can be removed and renewed very easily.

The contact finger support is made of molded bakelite. Current is carried around the bearing from the contact fingers by flexible corrugated brass to insure proper operation.

The A. C. Relays are of the single element type and operate on the plunger or solenoid principle. The coils are form wound with enameled wire. The bobbin or spool, on which the coil is mounted, is threaded into the top yoke which supports the coil unit. It is also threaded on the lower end into the washers, making it easy to remove and replace the coil if necessary. The coil is suitably protected by an outside covering.

The operating unit (Fig. 1) including the coil and armature, may be removed from the casing and contacts changed or cleaned with very little trouble. The coil and armature (Fig. 2) are made in separate units and can be removed from the operating unit very easily should the necessity arise.

The entire operating mechanism is suspended from the top plate (Fig. 1). The top plate is made of molded bakelite and the bottom of cast iron. The mechanism is all enclosed in a glass encasement which is mounted between and fits in grooves in the top and bottom plates and held in place by the four frame posts which are slipped through the top plate and screwed into the bottom plate, making the interior absolutely dust and waterproof. The relay is sealed by a wire run through the four frame posts, which it is necessary to break to remove the operating mechanism. All parts of the A. C. Relays are interchangeable.

These relays are designed to operate in accordance with R.S.A. standard, namely, when coil is energized the armature is picked up and closes the front contacts. When de-energized the armature drops, by gravity, and closes the back contacts. The relays are equipped with two front and two back non-independent contacts.

There are two types of our A. C. Relays:

Type "A" for use on 55 to 110 volts at 60 cycle.
Type "AA" for use on 55 to 110 volts at 25 cycle.

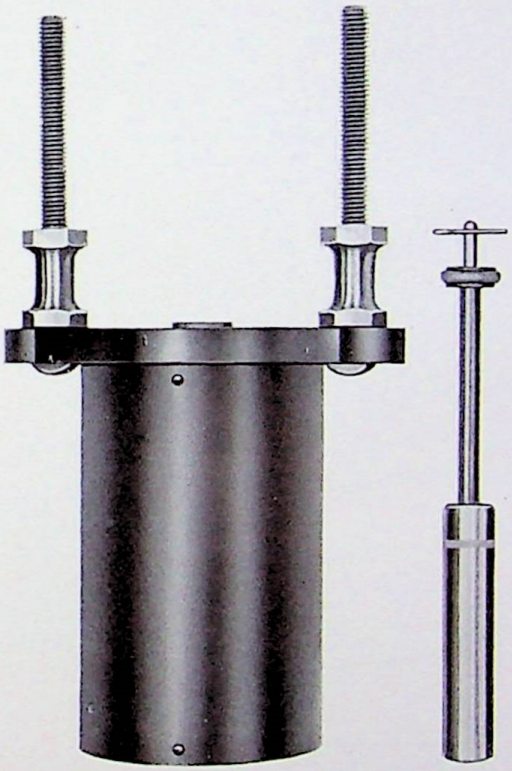

A. C. Relay Coil and Armature. Fig. 2.

The only difference in the construction of the two types is in the resistance of the coils.

D. C. RELAYS

THE D. C. Relays are equipped with either front or front and back non-independent contacts. These relays are designed for use on direct current of from 5 to 12 volts.

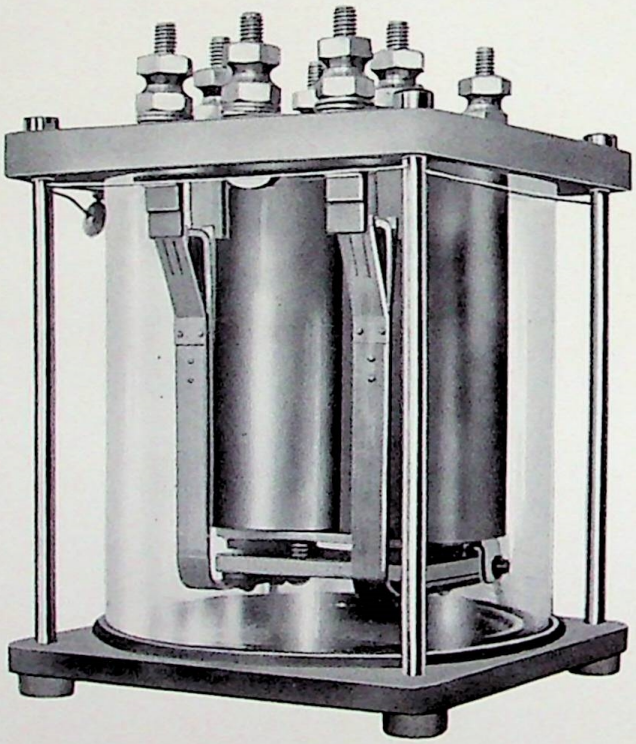

D. C. Relay Type "BB". Fig. 3.

They are made in the following types:

Type "A" single finger back contact.
Type "AA" single finger front and back contacts.
Type "B" two finger back contacts.
Type "BB" two finger front and back contacts.
Type "C" three finger back contacts.
Type "CC" three finger front and back contacts.

The entire operating mechanism is suspended from the top plate, which is made of bakelite, and can be easily removed after the seal is broken. The coils are form wound with enameled wire, suitably protected by an outer cover.

The contacts are made of irrideo platinum or coin silver and are designed to give a wiping surface to each other. Carbon contacts can also be furnished if desired. The contact fingers are made of the highest grade strip brass and are mounted on, and insulated from, the armature. Connections from the fingers to back binding posts are made of flexible corrugated brass strip.

The binding posts on all relays conform with RSA standard.

The air gap between the armature and cores is insured by the use of a hard brass stop pin so that when armature is picked up it will strike against the stop near the edge opposite the bearings and midway between the cores.

The size of both the A. C. and D. C. Relays is 7½ inches in height, 5 inches in width, and 5 inches in length.

Prices and other information on our relays will be given upon request.

CONCLUSION

OUR relays are guaranteed against imperfections in material and workmanship and any part found imperfect will be replaced free of charge. We stand behind our devices and assure entire satisfaction.

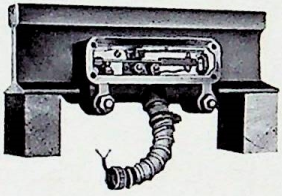

ADDRESS ALL COMMUNICATIONS TO

The Protective Signal Manufacturing Co.

DENVER, COLORADO

THE W. F. ROBINSON PRINTING CO.

The NATIONAL
WORM DRIVE WIG WAG

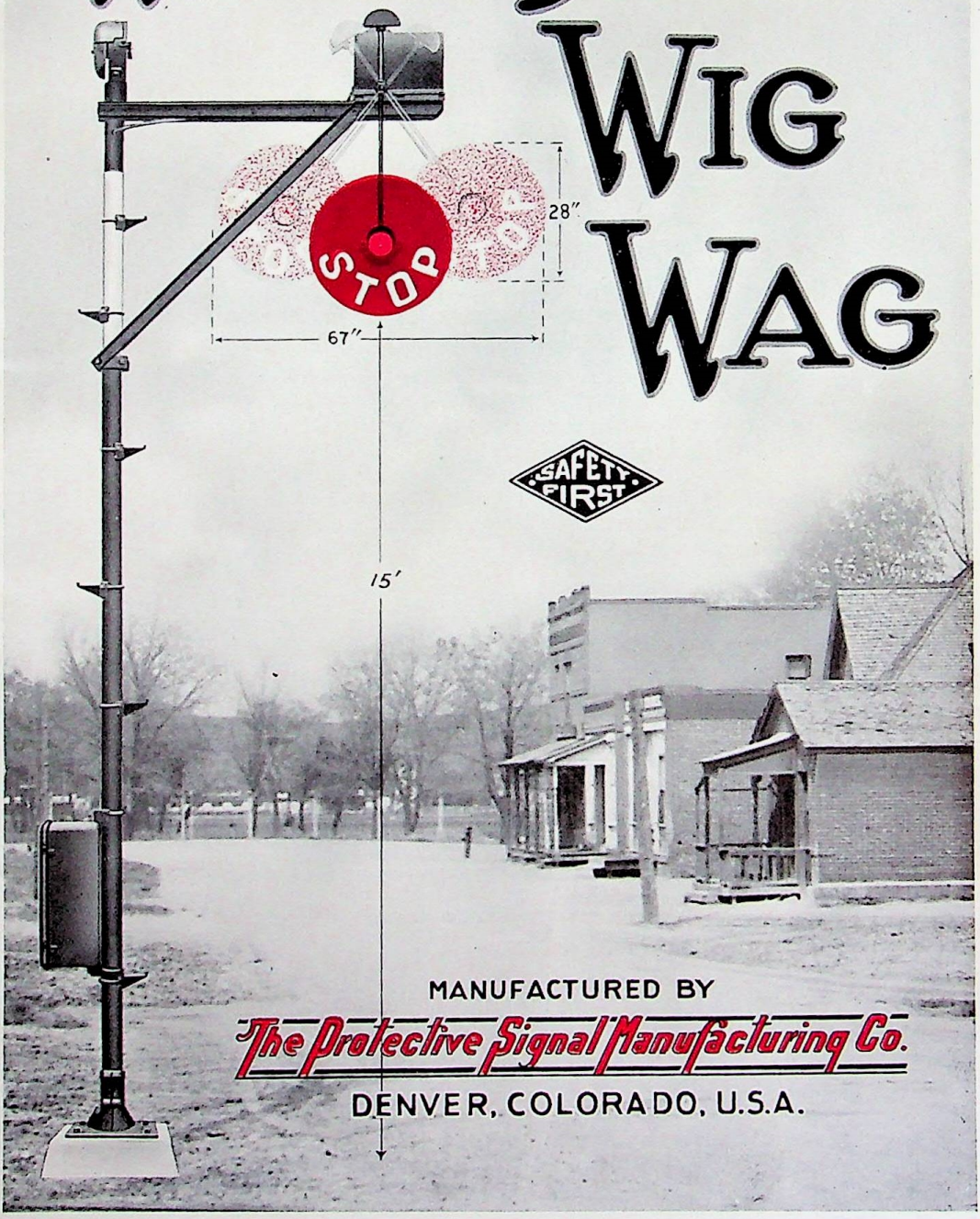

MANUFACTURED BY

The Protective Signal Manufacturing Co.

DENVER, COLORADO, U.S.A.

INTRODUCTION

THE National Worm Drive Wig Wag herein described is primarily the invention of railroad engineers who saw the need of such a device for the protection of grade crossings and fully realized that it must be constructed from the very best of materials, economical, absolutely positive, and simple to maintain.

One of the first models of this machine was placed on a break-down comparative test with a number of other similar devices. This test was conducted under the supervision of the signal departments of two of the largest railroad systems of the country. The results proved conclusively that this device was the most positive and reliable of its kind on the market.

That it lived up to its reputation was indicated last year at the Panama-Pacific Exposition in San Francisco, where it was awarded a silver medal, the highest award for a crossing signal.

Since acquiring this device we have incorporated improvements which have gone far toward maintaining its superior position in the signal field.

If interested in crossing signals, and if you are looking for the best the market affords, it will pay you to read the following pages.

The Protective Signal Manufacturing Co.

DENVER, COLORADO

DESCRIPTION

THE National Worm Drive Wig Wag, when used in conjunction with our Model E bell and oscillator control, comprises the most effectual warning signal for grade crossings on the market.

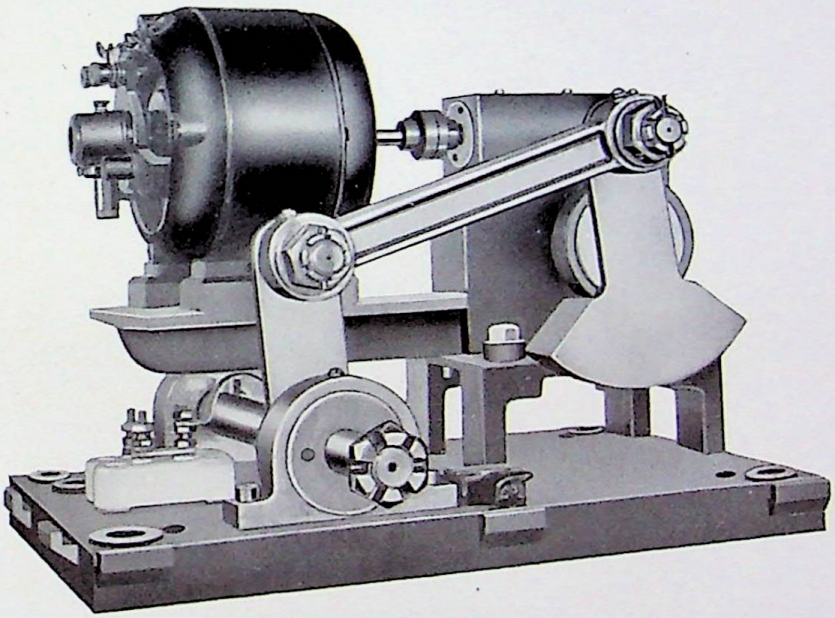

Fig. 1. Operating Unit.

In the manufacture of this device only the very best of materials are used. All bearings are of the ball and roller type. By employing the ball and roller bearings, friction and lubrication are reduced to a minimum.

Figure 1 shows the operating unit of this signal and its simple and rugged construction. The mechanism is operated by a small, well constructed, standard speed motor which is connected direct to the worm.

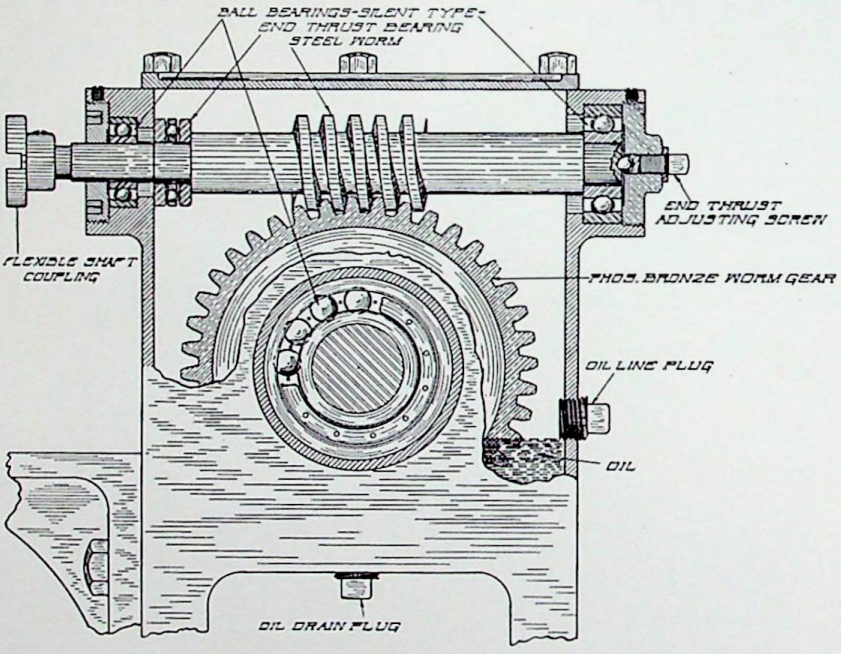

Fig. 2. Worm and Gear.

The worm and gear of the unit are enclosed in a cast iron casing, as shown by Figure 2. It is self lubricating and requires practically no maintenance.

A worm driven mechanism is conceded by all mechanical engineers to be the most positive in its operation. Owing to the fact that the reduction in speed is direct and that the worm and gear can be immersed in oil, this method of construction is considered superior to a reduction by gears which would require a number of independent bearings and increase the cost for maintenance.

The worm and gear are so constructed as to eliminate, to the very greatest extent, all lost motion.

An adjustment screw, as shown in Figure 2, is provided to take up any wear which may occur in the worm or gear.

The motors for the operation of this mechanism, where alternating current is used, are 1/10 H. P., 1150 RPM, giving sufficient power to carry several times the weight of the aspect, so that wind storms, snow or sleet have no effect upon it. A. C. motors at any standard cycle can be furnished.

A 40 to 1 reduction operates the disc or aspect to and fro at the rate of approximately thirty times per minute.

Standard signal motors are used for the operation of this wig wag on direct current.

The housing casing for the gear and worm is provided with an outlet for draining, as well as an opening at the oil level so that the proper amount of oil can be gauged.

This housing is also provided with a cover held in place by six screws which can be easily removed to permit inspection.

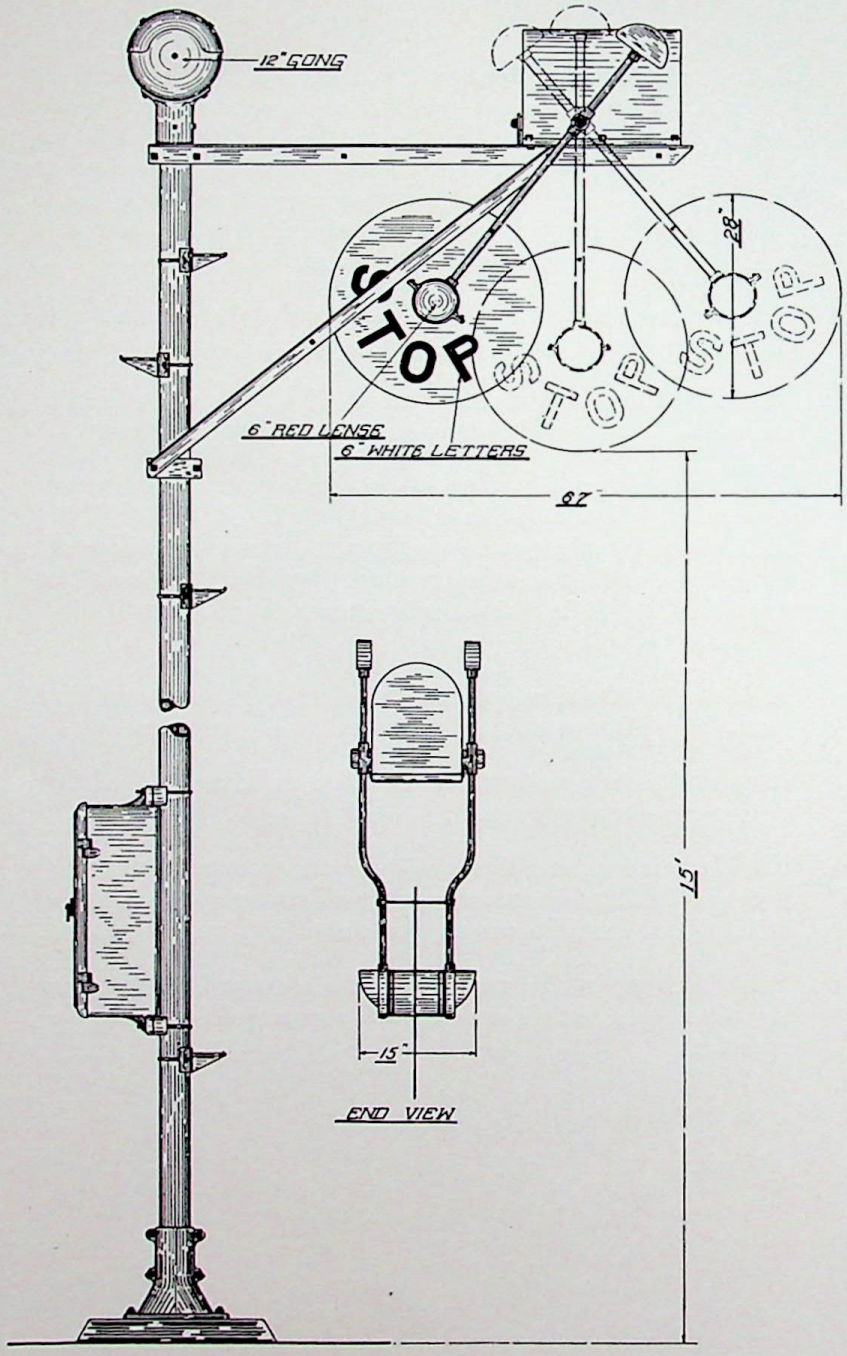

Fig. 3. Wig Wag and Bell Assembly.

The aspect of this wig wag is composed of a large disc, 28 inches in diameter, enameled bright red with the word "stop" in 6-inch white letters stenciled directly below a 6-inch red signal lens, as shown by Figure 3.

The red disc or ball is considered a universal danger signal and is recommended by the American Safety Congress as the most effectual design for a wig wag or moving danger indication.

When the signal is operated the disc is moved to and fro across the roadway, displaying a red illuminated signal lens which, with the loud ringing, 12-inch bell, gives a very effective warning of approaching danger.

Standard 6-inch red signal lenses are used.

Standard Mazda lamps illuminate the lenses when the signal is in operation and these lenses being hooded are plainly visible a distance of 1,500 feet or more in bright sunlight. At night they can be seen for a distance of two miles.

The lamps and lenses are mounted in a suitable casing and the lamps can be renewed by removing one or both of the lenses from this casing, which is provided with a wire clip for this purpose.

As shown in Figure 3, the swinging radius of the disc is 67 inches, giving a 42-inch swing to the illuminated lenses, which is approximately the same indication as that given by a watchman or flagman swinging a red lantern from a platform above the roadway.

Fig. 4. Typical Installation at West Florida Street, Denver, on D. & R. G. Ry.

The distance from the street or road level to the bottom of the disc is 15 feet, which allows ample room for any traffic to pass beneath it.

Owing to its elevation above the roadway and the distance that this aspect can be seen, ample time is afforded automobile drivers to bring their cars under safe control before reaching the crossing. The swinging red disc, illuminated lenses, and the loud ringing of the bell will compel their attention and cause them to STOP, LOOK and LISTEN before attempting to cross the tracks.

The wig wag mechanism carrying the aspect may be installed on cantilever brackets extending over the roadway 6 or 8 feet from the signal mast, as shown in Figure 3, or mounted on top of signal mast in the center of the street as shown in the cut on the back cover of this bulletin.

A warning signal of this character and design has the advantage over crossing gates, flagmen, etc., inasmuch as it is operated automatically and gives both an audible, moving and illuminated warning both day and night, regardless of weather conditions.

After each operation, and when in "clear" position, the disc of the wig wag is drawn back against the signal mast. This is the only motor operated wig wag which governs the position of the disc when not in operation, and it is also the only worm driven wig wag on the market.

All the operating mechanism is completely enclosed by a pressed steel cover, making it absolutely weather and dust proof and accessible for inspection.

All electrical connections are made on the interior of the housing casing and direct to RSA binding posts.

The wig wag, as well as our other devices, is adaptable to any voltage, either A. C. or D. C. It is an independent unit and can be operated from track circuits or any other method of control.

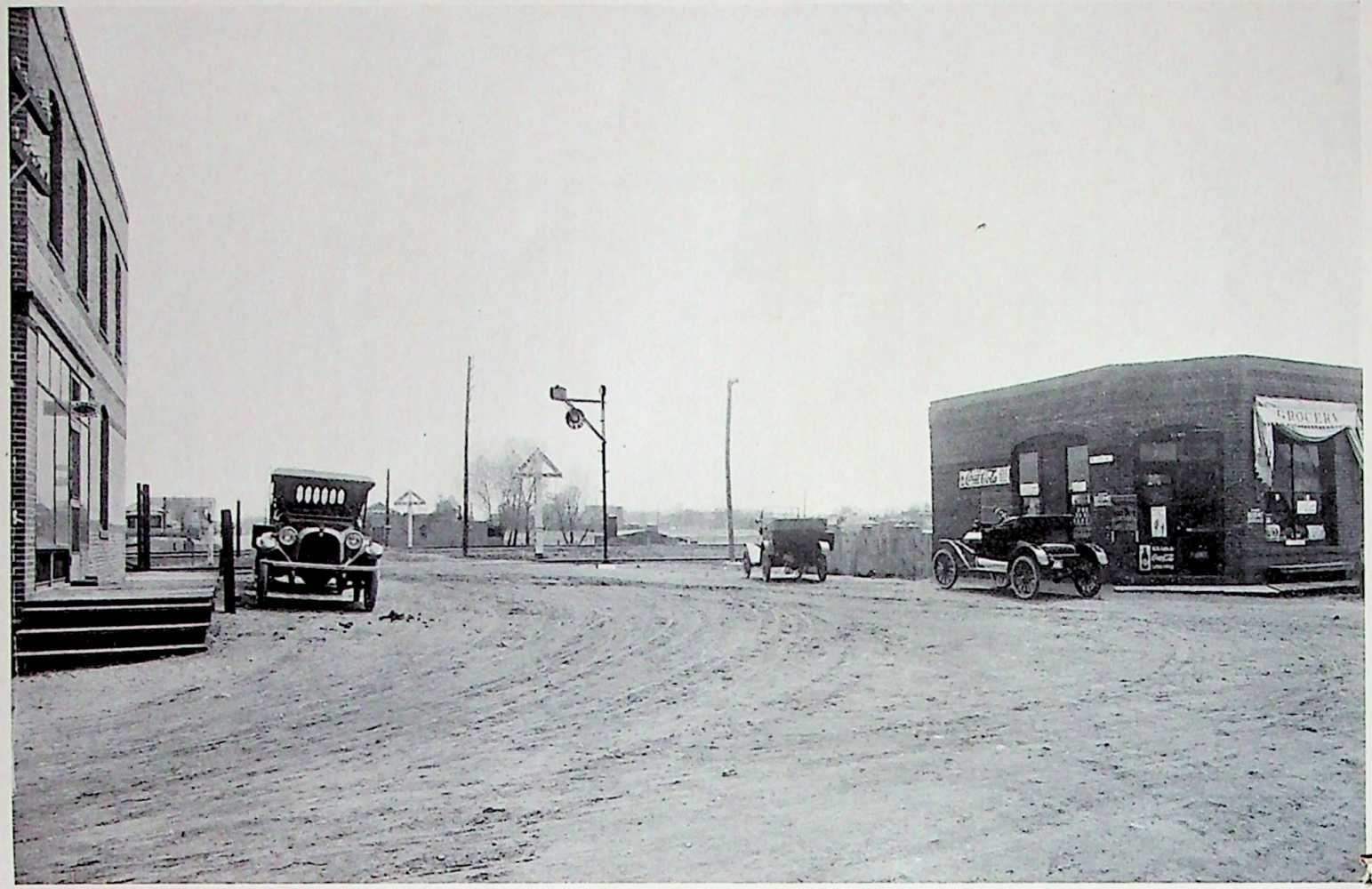

Fig. 5. Typical Installation on D. & R. G. Ry., Denver.

By means of the oscillator control, Figure 6, the signal is only operated when there is a movement on the tracks within the danger zone and it is cut out the moment the first trucks of a moving train reach the crossing.

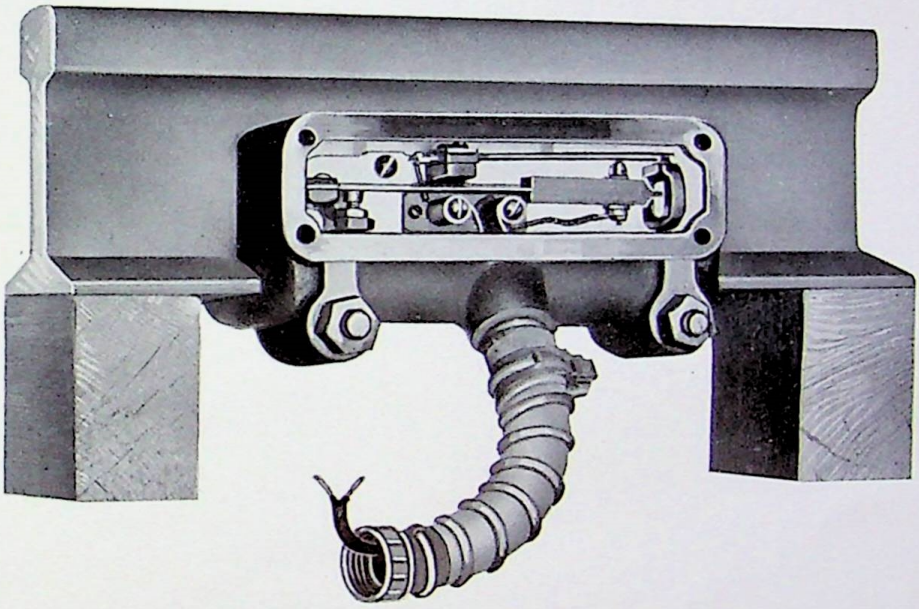

Fig. 6. Model C Oscillator.

The oscillator eliminates entirely the ringing of the bell or the operation of the signal when trains are standing at the station or cars are left standing on side tracks. Warning is only given when necessary, that is, when moving trains are within the danger zone.

Fig. 7. Installation at West Mexico Street, Denver.

Our complete crossing signal system, including the National Worm Drive Wig Wag, consists of our Model E Bell, Figure 8; our standard A. C. or D. C. Relays; our Automatic Thermo Time Units, Figure 9; our Oscillators, Figure 6;

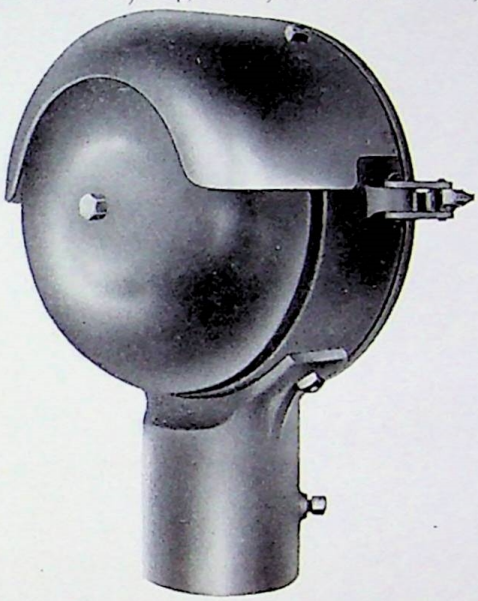

Fig. 8. Model E Bell Complete.

and our signal mast and relay box, Figure 3. The Model E Bell, where brackets are used for the wig wag, is usually installed on top of the signal mast. If desired this bell can be mounted on the side of the mast by the use of a goose-neck bracket.

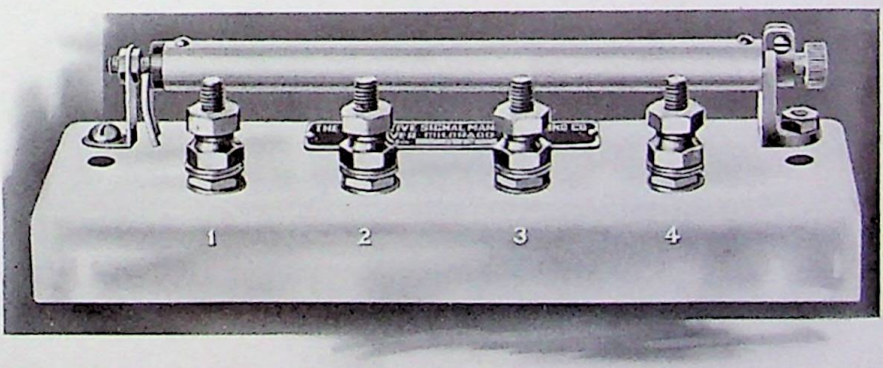

Fig. 9. The Automatic Thermo Time Unit.

The Relays and Automatic Thermo Time Units, as well as lightning arresters and terminals, are installed in the relay box.

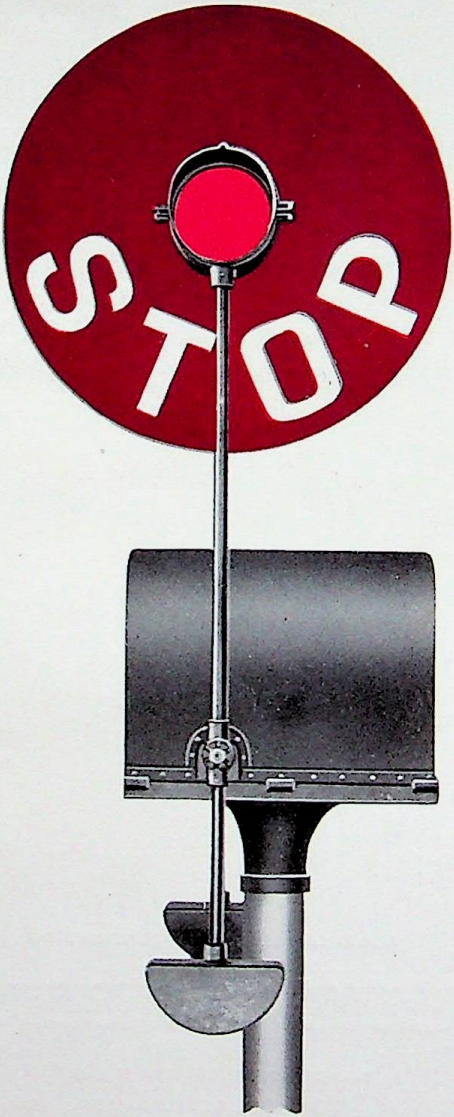

THE W. F. ROBINSON CO., DENVER.

Form 573 2M 8-1-16

NEVADA NORTHERN RAILWAY COMPANY

ORDER FOR BETTERMENT, RENEWAL AND REPAIR WORK

DEPT. No.....

EAST ELY, NEVADA Dec. 15, 1916.

DEAR SIR:

AUTHORITY FOR THE FOLLOWING WORK IS HEREBY GIVEN:

NEVADA NORTHERN RECEIVED DEC 16 1916 OFFICE OF CHIEF ENGINEER

DATE AUTHORIZED GEN. MGRS. NO. 539

WORK TO BE DONE UNDER THE DIRECTION OF

DIVISION ESTIMATED COST

LOCATION

DESCRIPTION For expense of construction of new wigwag signal at stem of wye, East Ely, Nev.

MEMORANDA

TO C. W. Backe, Chief Engineer, East Ely, Nev.
cc - Frank Roper, Auditor, East Ely, Nev.
GM8s office file.

L. F. Cannon

VICE PRESIDENT AND GENERAL MANAGER

S-5.

December 13, 1916.

Mr. M. L. Smith, Chief Electrician,
Nevada Northern Railway Company,
East Ely, Nevada.

Dear Sir:

Find attached bulletins No. 3, 4, 5, and 6, of the Protective Signal Manufacturing Co., attached copies together with blue print (now in your possesion) and letter forwarded to you the other day on this subject covers all information we have for the installation of a worm drive Wig Wag.

Yours truly,

Chief Engineer.

December 8, 1916.

S-5.

The Protective Signal Manufacturing Comapny,
1421-1439 Eighteenth Street,
Denver, Colo.

Gentlemen:

Kindly furnish us duplicate copies of blue print #158 and also print #1221 and in addition duplicate copies of descriptive bulletins for the parts used in connection with the worm drive wig wag as quoted on November 21, 1916.

Yours truly,

C.B/S. Chief Engineer.

(2-22-50M) Form 570

Order No

NEVADA NORTHERN RAILWAY COMPANY

S. K. No.

ORDER ON STOREKEEPER.

Charge Acct No. Service

December 4, 1916. 191

Automatic Wig Wag Signal.

TO STOREKEEPER:

Ave. C & 14th street.

Please furnish the following material at

CLASS	ARTICLES	FOR WHAT PURPOSE	DO NOT WRITE IN THIS SPACE QUANTITY	PRICE	AMOUNT
2	Stringers 8" x 17" x 30'.	GMO	539		
1	" 8" x 17" x 20'				
	Memo:				
	Above stringers cut to make six				
	5" on top and 7" on butt 20' telegraph				
	~~Poles, same to be used for wig wag installa-~~				
	tion.				

This blank to be used in drawing material from the Store Department.
If for repairs to Locomotives, it must show number of Locomotive and whether for "Shop" or "Running" Repairs; also service engaged in, whether Ore, Suburban or Main Line.

(TITLE)

(2-22-50M) Form 570

NEVADA NORTHERN RAILWAY COMPANY

ORDER ON STOREKEEPER.

Order No. _____

S. K. No. _____

Charge Acc't No. _____ Service _____

11/29 1916

TO STOREKEEPER:

14th Street and Avenue C Crossing

Please furnish the following material at Eastly c/o Ed Hornicks Signal

CLASS	ARTICLES	FOR WHAT PURPOSE	DO NOT WRITE IN THIS SPACE		
			QUANTITY	PRICE	AMOUNT
✓ 1	Sack Cement	Foundation			
✓ 6	Cuft Gravel	pier			

GMO 539

This blank to be used in drawing material from the Store Department.
If for repairs to Locomotives, it must show number of Locomotive and whether for "Shop" or "Running" Repairs; also service engaged in, whether Ore, Suburban or Main Line.

C W Backe

Chief Eng

(TITLE)

(2-22-50M)

Form 570

NEVADA NORTHERN RAILWAY COMPANY

Order No.

S. K. No.

ORDER ON STOREKEEPER.

November 27, 1916. 191

Charge Acc't No. G.M.O.--- 339

Service

TO STOREKEEPER:

Please furnish the following material at East Ely, Avenue C & 14th Street, Lincoln Highway Wig Wag Crossing Signal.

CLASS	ARTICLES	FOR WHAT PURPOSE	DO NOT WRITE IN THIS SPACE		
			QUANTITY	PRICE	AMOUNT
✓ 4	3/4" x 18" x 6" Anchor Bolts.				
	Detai to be furnished by				
	Mr. Horrocks.				
4	3/4 Hexagon Nuts.				
5	Sacks Cement.				
35	Cu. Ft. Clean Washed Gravel.				

Complete

This blank to be used in drawing material from the Store Department.
If for repairs to Locomotives, it must show number of Locomotive and whether for "Shop" or "Running" Repairs; also service engaged in, whether Ore, Suburban or Main Line.

NEVADA NORTHERN RAILWAY. Form 501-O

MATERIAL REQUISITION No._____ Sheet No._____ to No._____

To Mr. L. G. Cannon, V.P. & G.M. East Ely, Nevada, November 27, 1916. 190

Avenue "C" & 14th St East Ely Nevada

GMO — Lincoln Highway

THE FOLLOWING MATERIAL IS REQUIRED:

APPROVED: _____ TITLE _____

APPROVED: _____ TITLE _____

TITLE _____

INSTRUCTIONS: This form to be used by all departments in ordering material and supplies, except such as are drawn on Agents' and Conductors' requisitions, Form 509-O. Requisitions must be approved by the head of the department and General Manager.
Requirements should be covered by one requisition per month as far as possible.

2-11-07--2M

QUANTITY		KIND OF MATERIAL	SHIP TO	FOR WHAT PURPOSE	CHARGE TO			PRICE EACH.	AMOUNT
ON HAND	ADDITIONAL REQUIRED				ACCT. NO.	DIST.	WORK ORDER		
		The following material to be ordered from							
		The Protective Signal Manufacturing Company,							
		1421-1439 Eighteenth Street, Denver, Colo.							
	3	Model C Oscillators.						$ 24.00	$ 72.00
	2	Relays, type A.C.						35.00	70.00
	1	Time Unit, type EM						25.00	25.00
	1	Solenoid Switch, type A.C.						10.00	10.00
	1	Model E Bell, type A.C.						35.00	35.00
	1	National Worm Drive Wig Wag, complete with brackets.						150.00	150.00
	1	Signal Mast, complete with pole steps, type B relay box, mast base and anchor bolts.						45.00	45.00
	1	Fused Knife Switch						1.00	1.00
	3	Lightning Arresters.						1.75	5.25
	10	RSA Porcelain Terminals.	Total F. O. B. Destination.					.25	2.50
									$415.75

The Protective Signal Manufacturing Co.
1421-1439 Eighteenth Street,
Denver, Colo. November 21st, 1916.

File No. 575.

COPY

Nevada Northern Railway Co.,

East Ely, Nevada.

Mr. L. G. Cannon, V.P. & Gen. Mgr.,

Dear Sir:

Owing to the absence of our circuit draftsman we have been somewhat delayed in getting off the blue prints and quotation for the proposed crossing signal installation on your lines, and in accordance withour arrangement when we had the pleasure of seeing you in Denver. However, we trust that this delay has not seriously inconvenienced you, and we are enclosing you under separate cover duplicate copies of our blue pring #158 which shows installation layour and circuit diagram for the protection of the crossing shown on the blue print which you left with us. We are also enclosing a copy of our blue print #1221 which shows an assembly of our wig wag, bell, and mast. We are also sending you copies of descriptive bulletins on our various protective devices which go to make up our complete crossing signal system.

The apparatus which we propose furnishing in this connection and cost for same is as follows:

NO.	NAME.	Price EACH	AMOUNT.
3	Model C Oscillators	$24.00	$72.00
2	Relays, type A.C.	35.00	70.00
1	Time Unit, type EM	25.00	25.00
1	Solenoid Switch, type A.C.	10.00	10.00
1	Model E Bell, type A.C.	35.00	35.00
	National Worm Drive Wig Wag, complete with brackets	150.00	150.00
1	Signal Mast, complete with pole steps, type B relay box. mast base and anchor bolts	45.00	45.00
1	Fused Knife Switch	1.00	1.00

COPY

		FWD.....	$408.00
3	Lightning Arresters	1.75	5.25
10	RSA Porcelain Terminals	.25	2.50
	Total, F.O.B. Destination.....		$415.75

Shipment of the above apparatus can be made within two weeks from receipt of your order, providing the order is received by December 1st

The above quoted apparatus is for operation on 110 volts, at 60 cycle, alternating current, which we understand is available at the point in question. If you cannot obtain alternating current it would be necessary for you to use either primary or storage battery, in which case the above quotation would have to be revised somewhat to cover the necessary materials; the circuit diagram, however, would be the same as shown by our print #158, regardless of what source or power is used for theoperation of the apparatus.

In addition to the above quoted devices you would require the following material: #9 bare iron wire for line wires extending from the RO oscillators to the signal at the crossing, and as shown by the print: the necessary #12 rubber covered duplex copper wire for connections from oscillators to the line, also shown on the print, and these wires should be protected running them underground through 3/4" iron pipe conduit or other suitable protection; the necessary insulators, brackets and other pole line material which could no doubt be figured out by your electrician; and five sacks cement and thirty sacks of gravel for the concrete foundatioh for mast, as shown by our print #1221. The connections from the cut-out oscillator and from the line wires to the signal itself may be run underground through iron pipe extneding up through the concrete foundation into the signal mast, or can be run overhead from the pole line to the top of the mast, whichever would be most convenient. The dimensions shown on our print #1221 will enable your men to make the proper form for the concrete foundation, which should extend above the ground about eight inches and from three and one half to four feet in depth. The wires for the interior circutis from the relays, etc., in the relay box, to the bell and wig wag, whould be #14 rubber covered copper wire,

COPY

single conductor. These wires should all be run into the relay box to RSA terminals on which we have quoted.

We believe from the description given on our pring #158 that your electrician will have no trouble in understanding the circuits and in locating the various devices. The protection gimen by such an installation would be as follows: A train movement from the main line over the south or north Wye would start the signal in operation as the first trucks of the train passed over either one of the RO oscillators, and signal would cut out as the first trucks passed over CO oscillator at the crossing. In proceeding back to the main line the train would first pass over CO oscillator at the crossing which would cut out the RO Oscillators, eliminating the possibility of a back ring or false warning as such train passed on to the main line over the RO oscillator. This, we believe, is what you desire.

If the information which we have gimen you is not sufficient for your needs we will exteem it a favor if you will call on us for any additional data which is necessary.

Trusting that we have made the matter entirely clear to you and that we may be favored with your valued order, and thanking you for the opportunity given us, we are,

Yours respectfully,

THE PROTECTIVE SIGNAL MANUFACTURING COMPANY.

A.M. Adams.

Secretary.

AMA/G